NOTES:
SEE "PART NUMBER SPECIFICATIONS" FOR CODES AND CONFIGURATIONS
(1) GAUGE TYPE: PRESSURE GAUGE (DIMS SAME FOR '2' PNEUMO GAUGE)
(b) ACCURACY
(1) DIAL SIZE: 4.5 INCH
(T) CASE TYPE: TURRET
(e) POINTER TYPE
(f) DIAL FEATURES
(gg) PRESSURE RANGE (SEE "DIAL AVAILABILITY CHART")
(h) CASE COLOR
(i) FITTING POSITION
(j) FITTING TYPE
(-k) ADDITIONAL OPTIONS

REVISIONS			
REV	DESCRIPTION	DATE	APPROVED

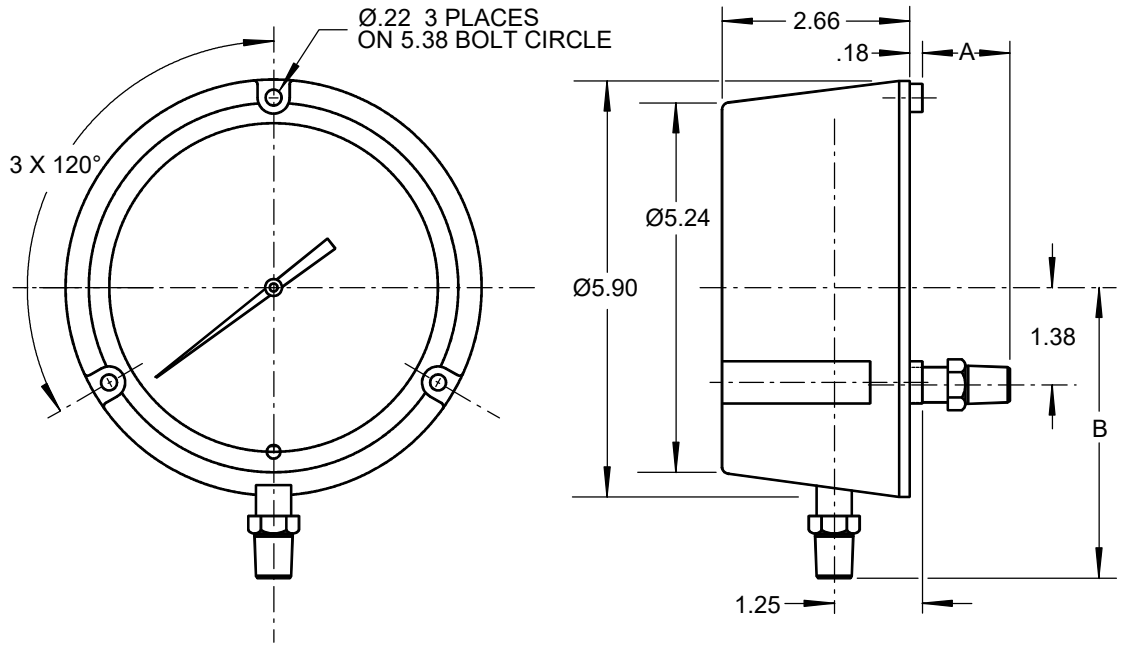

FITTING				DIMS	
(i)	POS	(j)	TYPE	A	B
0	Back	1	1/4 NPT	1.24	
		3	1/2 NPT	1.24	
		4	AS33514E4 / MS33514E4	1.24	
		5	AS4395E04 / MS33656E4	1.24	
		6	AS5202E04 / MS33649E-04	1.24	
		7	1/4 VCO MALE	1.20	
		8	9/16-18 MIL-G-18997	1.24	
		9	1/4 BSP	1.24	
2	Bottom	1	1/4 NPT		4.12
		3	1/2 NPT		4.12
		4	AS33514E4 / MS33514E4		4.38
		5	AS4395E04 / MS33656E4		4.38
		6	AS5202E04 / MS33649E-04		4.38
		7	1/4 VCO MALE		3.86
		8	9/16-18 MIL-G-18997		3.85
		9	1/4 BSP		4.38

UNLESS OTHERWISE SPECIFIED DIMENSIONS ARE IN INCHES

ANGULAR		± 0° 30'
LINEAR	.XX	± .03
	.XXX	± .015
FRACTIONAL		± .031

CORNER AND FILLET RAD. .005–.015
REMOVE ALL BURRS

DIAMETERS ON SAME C/L
RUNOUT WITHIN _____ FIR

SURFACE ROUGHNESS
USAS B46.1

MATERIAL:
CASE: ABS OR EQUAL
GFN AVAILABLE
WETTED PARTS:
INCONEL X-750
316 SS

FINISH:

CONTRACT NO.

		DATE
PREP BY	CMH	5/11/2021
CHECK		
PROJ ENGR		

USED ON:

FILE NAME: 1b1Tefgghij

PERMA-CAL INDUSTRIES, INC.

PRESSURE GAUGE, 4.5" TURRET

SIZE	CODE IDENT NO.	DRAWING NO.	REV
A	59018	1b1Tefgghij-k	

SCALE _____ WEIGHT _____ SHEET 1 OF 1